Hyundai Kona: Dual Clutch System / Dual Clutch Assembly Repair procedures

Removal

1. Remove the dual clutch transmission from the vehicle.
   (Refer to Dual Clutch System - "DCT")
2. Remove the retaining ring (A) and then removing the spline hub (B).

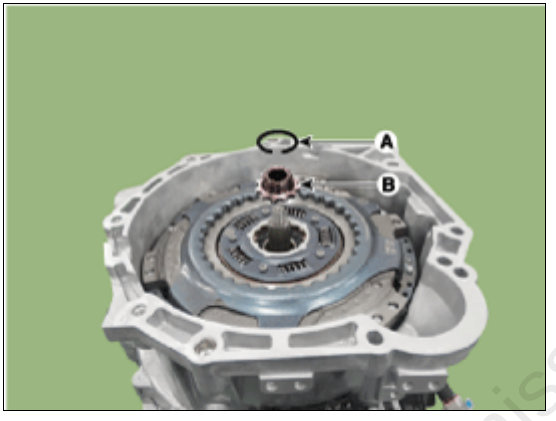

3. Remove the snap ring (A).



transmissionmanuals.com

CAUTION

- The snap ring can deform when it removed by forced removal and can't reuse it.
- If it's difficult to remove the snap ring for stuck, release the stuck by using a rubber hammer with a center cylinder of dual clutch installer (09430-2A240) and then remove the snap ring.
- Be careful to damage dual clutch assembly support bearing rubber seal.

4. Remove the dual clutch assembly (A) by using the special service tool [SST No.: 09430-C1180].

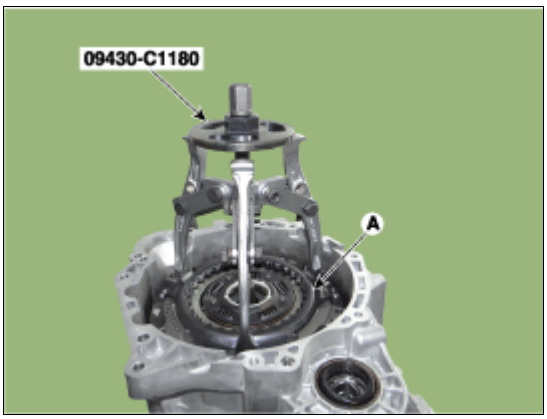

Installation

NOTICE

- Check the applied state of grease on input shaft spline part (A) before installing the dual clutch assembly. If there is no grease on each spline end to 10mm.
- If excessively applied grease, grease can be scattered by centrifugal force which can contaminate the clutch disc. This can cause a loss of friction force

Specified grease : Extreme pressure grease for vehicle
Quantity : 0.15 - 0.25g

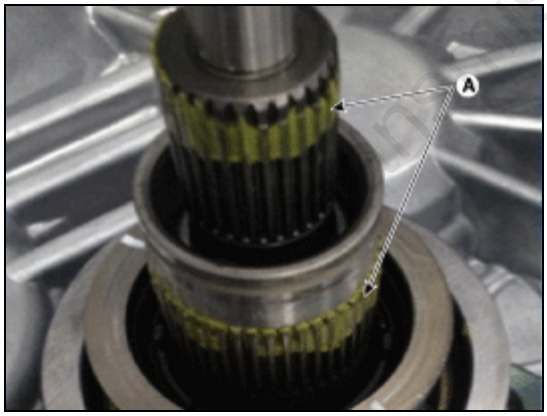

1. Install the SST (No.:09430-2A240) on the support bearing with in the dual clutch assembly (A).

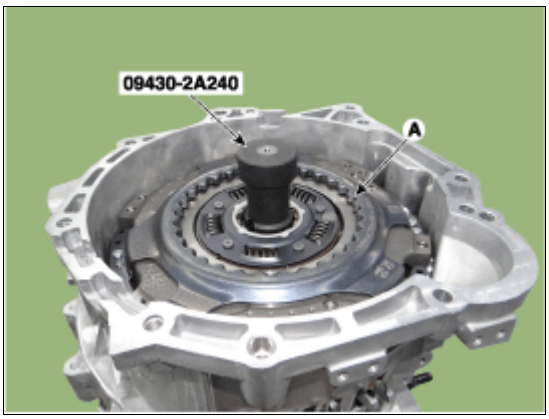

2. Install the dual clutch assembly (A) using the SST (No. : 09430-2A240) after Install the SST (No. : 09430-2A240) on the clutch housing side.

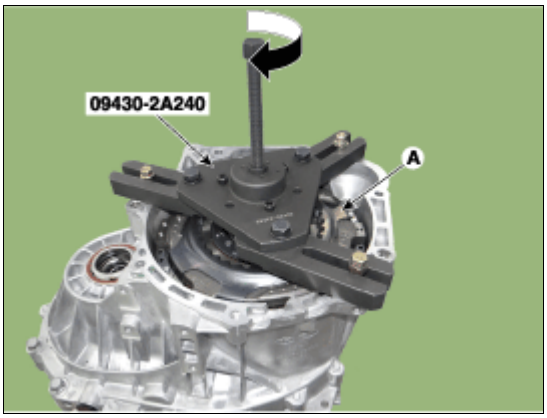

3. Install the snap ring (A).

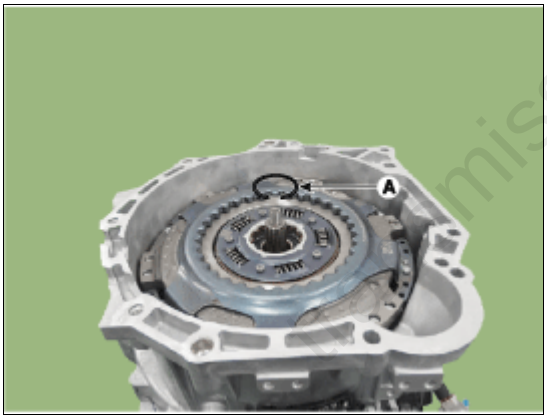

⚠ CAUTION

- When installing make sure to ensure that the dual clutch snap ring is seatted securely in place.
- When installing never reuse the deformed dual clutch snap ring.

4. Install the spline hub (B) and the install the retaining ring (A).

transmissionmanuals.com

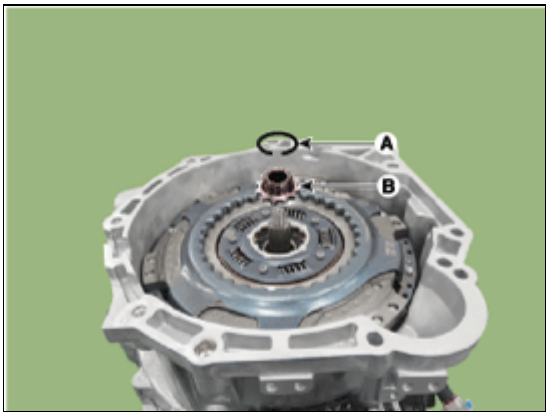

5. Install the dual clutch transmission assembly.
   (Refer to Dual Clutch System - "DCT")
6. Perform the work procedures for abrasion compensation reset after installing the new dual clutch assembly.
   (Refer to Clutch Actuator Assembly - "Adjustment")
7. Perform the clutch touch point learning procedure using the GDS after replacing the dual clutch assembly.

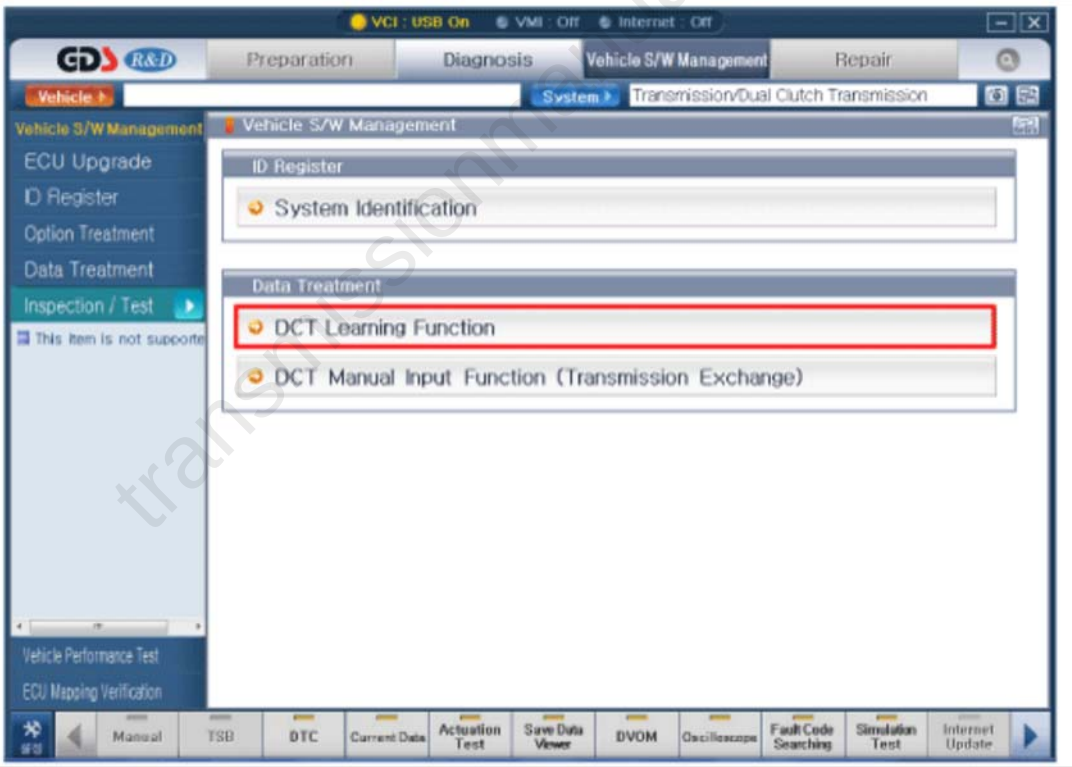

NOTICE

- Even if you removed and reinstalled the clutch actuator, be sure to perform the touch point learning.
- If you have replaced the dual clutch assembly or clutch actuator, be sure to perform the touch point learning.

transmissionmanuals.com